ECEN 252
HW 7

$K_n' = 200\mu$ $\lambda = .05$, $V_T = .6V$ $C_{gs} = 20fF$, $C_{gd} = 5fF$, $C_{db} = C_{sb} = 2fF$

1.

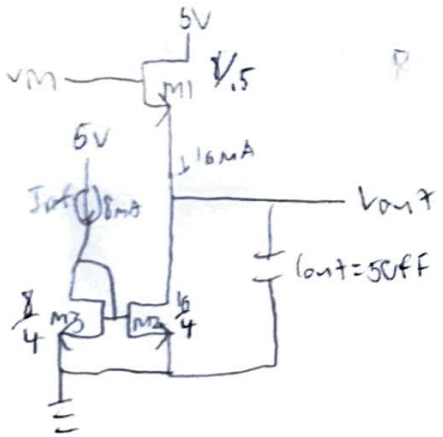

$r_{o1} \| r_{o2} = \frac{1}{.05(16mA)} \| \frac{1}{.05(16mA)} = 625K$

$16mA = \frac{1}{2}(200\times10^{-6})\frac{8}{.5}V_{ov1}^2$

$V_{ov1} = .1V$

$g_{m1} = 3.2\times10^{-4}S$

$16mA = \frac{1}{2}(200\times10^{-6})\frac{16}{4}V_{ov2}^2$

$g_{m2} = 1.6\times10^{-4}S$

$V_{ov2} = .2V$

$R_{out} = \frac{1}{g_{m1}} \| 625K = 3109.453\Omega$

a.

$A_v = g_{m1} R_{out}$

$\boxed{A_v = .9945\ V/V}$

b.

$R_{src} = 100K$

$\tau_{in} = R_{src}((C_{gd} + C_{gs}(1-A_v))$

$= 100K(5fF + 20fF(1-.9945))$

$= 5.1\times10^{-10}S$ ← dominant pole

$\tau_{out} = (C_{out} + (C_{db} + (1-\frac{1}{A_v})C_{gs})(r_{o1} \| r_{o2} \| \frac{1}{g_{m1}})$

$= 50fF + 2fF + (1-\frac{1}{.9945})20fF)(3109.453)$

$= 1.614\times10^{-10}S$

c.

$\tau_{in} = 100K(50\times10^{-15}) = 5\times10^{-9}S$

Buffer improves amp b/c it lowers the τ which increases the freq of the first pole. Allows more flexibility for freqs in midband

2 part B ext

$C_{out} = 2fF + 5fF + 2fF + 5fF + 50fF$
$= 64fF$

$R_{out} = r_{o6} \| r_{o7} = 6.25 \| 2.5M = 1.786 M$

$\tau_{out} = C_{out} R_{out} = \boxed{1.143 \times 10^{-7} s}$

τ_B is dominant (lowest freq, largest time)

2.

$k_n' = 200\mu A$ $k_p' = 100\mu A$ $\lambda_n = .05$ $\lambda_p = .02$ $V_{TN} = V_{TP} = .7V$

$C'_{gs} = 4fF$ per μm^2

$C_{gd} = 5fF$, $C_{db} = C_{sb} = 2fF$ ← not specified as C' or to be F/μm.

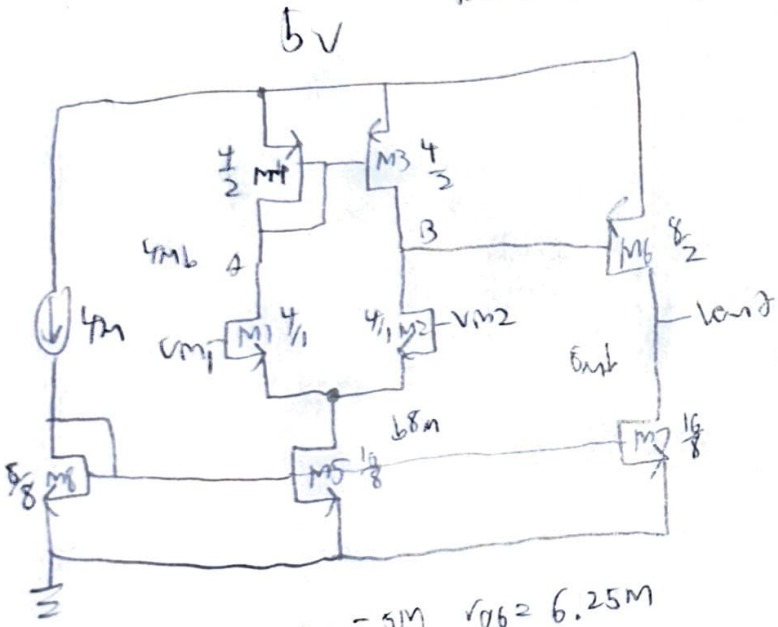

$V_{ov8} = V_{ov7} = V_{ov8} = .2V$

$V_{ov1} = V_{ov2} = .1V$

$V_{ov3} = V_{ov4} = V_{ov6} = .2V$

$g_{m1} = g_{m2} = \frac{2(4m)}{.1} = 8 \times 10^{-5}$

$g_{m6} = \frac{2(8m)}{.2} = 8 \times 10^{-5}$

$g_{m4} = g_{m3} = \frac{2(4m)}{.2} = 4 \times 10^{-5}$

$r_{o1} = r_{o2} = 5M$ $r_{o6} = 6.25M$

$r_{o3} = r_{o4} = 12.5M$ $r_{o7} = 2.5M$

$A_1 = g_{m2}(r_{o2} \| r_{o3}) = 285.714$ V/V

$A_2 = g_{m6}(r_{o6} \| r_{o7}) = 142.857$ V/V

$A_T = A_1 A_2 = 40816.327$ V/V $= 92.217$ dB

V_A: $R_A = \frac{1}{g_m} \| r_{o1} \| r_{o4} = 24826.216 \Omega$

$C_A = 2fF + 5fF(1 + \underbrace{\tfrac{1}{2}}_{g_{m4}/g_{m1}}) + 2fF + 4fF(4)(2) + 4fF(4)(2) + 5fF(1 + \underbrace{1492.857}_{g_{m4}(r_{o2} \| r_{o3})})$

$C_A = 794.786 fF$

$\boxed{\tau_A = R_A C_A = 24826.216(794.786 \times 10^{-15}) = 1.973 \times 10^{-8} s}$

V_B: $R_B = r_{o3} \| r_{o2} = 3.571M$ $C_B = 2fF + 5fF + 2fF + 5fF + 4(8)(2) + 5fF(1 + g_{m6}(r_{o6} \| r_{o7})) = 2.256 \times 10^{-13}$

$R_B C_B = \tau_B = \boxed{2.843 \times 10^{-6} s}$